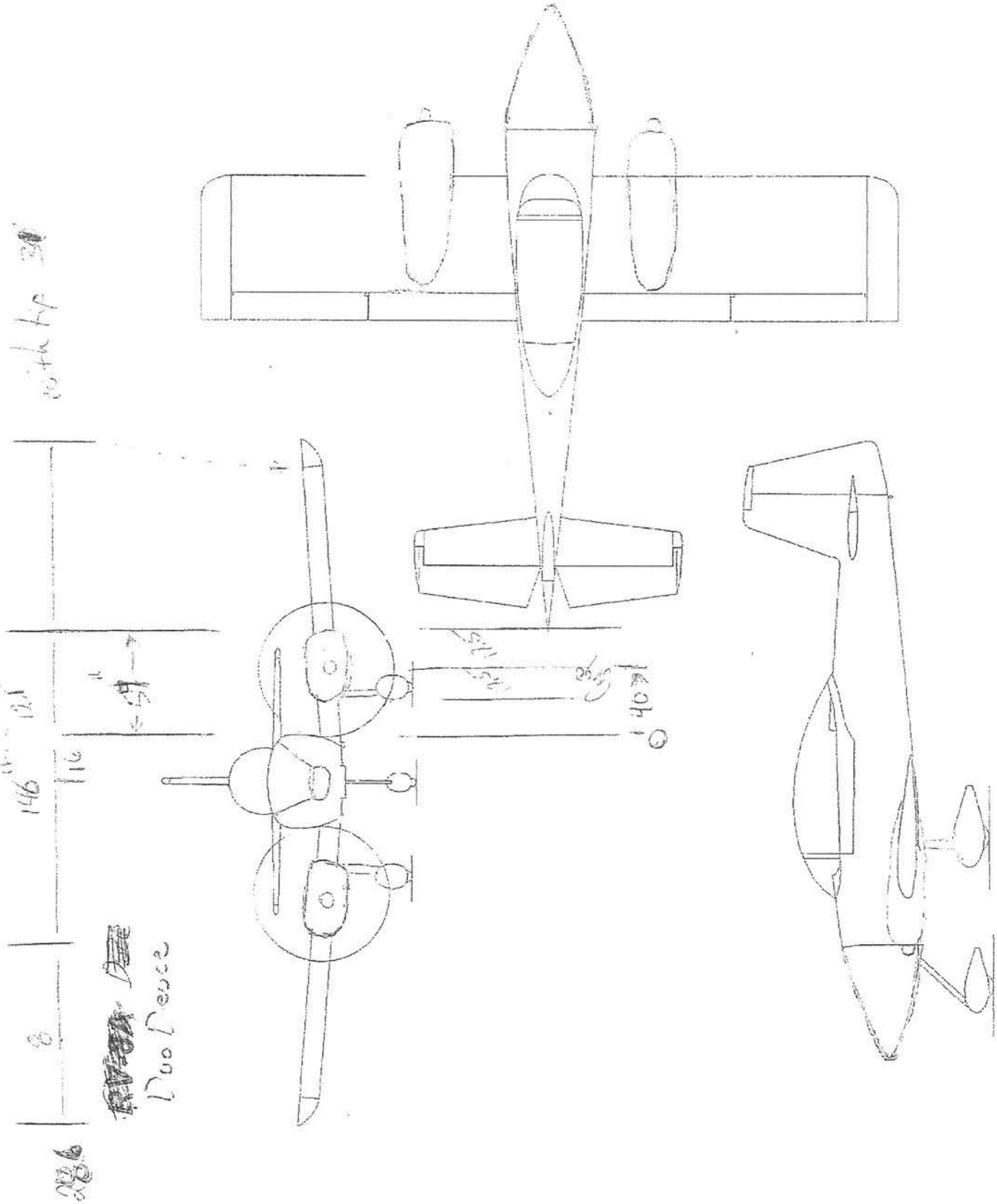
with Hp
146
116
8
Duo Deuce